Transmitter for the Neglected Band

NO LICENSE IS REQUIRED FOR THE 1750-METER (160-190-kHz) BAND

BY JIM WHITE/W5LET

AS LONG AGO as 1950, the Federal Communications Commission issued Part 15 of its Rules—an action we are all familiar with because it legalized the operation of unlicensed walkie-talkies of the 100-mW class in the 27-MHz (11-meter) CB band. The same action also set up a 30-kHz band between 160 and 190 kHz. This relatively unknown, unused band can be utilized for experimental, unlicensed operation provided certain technical requirements are met. The latter include: transmitter input power must be limited to 1 watt; antenna and feedline length must not exceed 50 feet; emissions outside the band must be down at least 20 dB below the unmodulated carrier; and operation must be on a non-interference basis. There is also the universal rule: no profane or illegal language!

You may wonder what can be done at these low frequencies with only one watt. Here, the ground wave is the thing. On a cold winter night, with an efficient antenna, you can work up to 100 miles. There are no restrictions on the type of emission that can be used; so you can experiment with radioteletype, SSB, FM, conventional AM, or just plain CW—as long as you observe the band limits with your modulation and make sure that no commercial station is on the air in your location.

What do you do all this with? The gear described here is an easy-to-build, low-cost transmitter using only three tubes. (A companion tuner will be described next month.) The r-f portion of the transmitter (Fig. 1) uses a dual triode (*V1*), with one half used as the oscillator and the other half as the r-f amplifier. Crystals for this frequency are expensive and hard to find, but the oscillator circuit used here is very stable. Another dual triode (*V2*) is used as the speech amplifier with gain control between stages. These two stages provide ample gain for a ceramic or crystal mike. The speech amplifier drives *V3*, a class A modulator.

The power supply is a conventional half-wave rectifier with filter.

Construction. The prototype was assembled in a 7" x 9" x 2" aluminum chassis as shown in the photographs. Although the layout is not critical, it is suggested that the same general approach be used. Note that the transmitter coil *L2-L3* is on a plug-in

EDITOR'S NOTE

Although the transmitter described here does not require a license for operation, strictly speaking it may need a certificate attached to it. The certificate may be executed by "a technician skilled in making and interpreting the measurements that are required to assure compliance" with Part 15 of the FCC Rules. The certificate should contain information on the operating conditions of the device, the antenna being used, a statement certifying that the device complies with the FCC Rules as described in this article, and the date of construction.

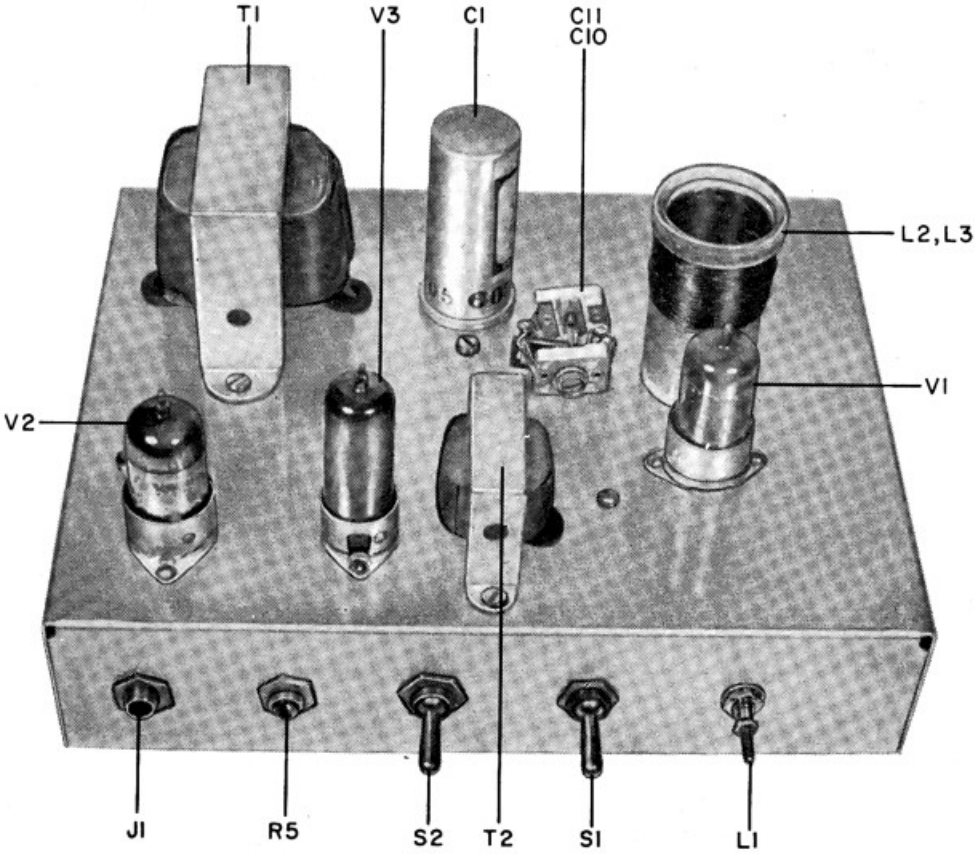

The components are easily assembled on a 7" x 9" x 2" aluminum chassis. Note how the L2 and L3 coils are random wound on the plug-in coil form.

form, so a socket must be used for it. The coaxial antenna connector, *J2*, is mounted on the rear apron. The oscillator coil, *L1*, is mounted on the front apron, with the tuning slug screw available from the front. The lead from *L3* to the coaxial connector is made from a length of small-diameter coaxial cable.

To wind *L2* and *L3*, use the form called for in the Parts List and drill four small holes over the designated pins to pass the wire through the form. The plate coil, wound first, starts at pin 5 of the form and consists of 200 turns of #30 enamelled wire, scramble-wound on the form. If you try to wind the coil neatly, you will soon run out of form, so scramble the windings to occupy about ⅞" of the form. Terminate *L2* at pin 2. Be sure to scrape the insulation off the wires before trying to solder them to the pins on the coil form.

Coupling coil *L3* is composed of 25 turns of #30 enamelled wire scramble-wound on top of *L2*. The winding begins at pin 1 and is in the same direction as *L2*. It ends at pin 6. Once the windings are complete, coat the assembly with coil dope to keep the turns from moving.

Testing. With power switch *S1* on and transmit switch *S2* off, note that the filaments of the three tubes glow. With *S2* on, check for high voltage at the tube plates. Take care when using the voltmeter—one hand holding the probe handle, the other off the chassis!

The best way to set the operating frequency is by using a frequency meter, remembering to include the sidebands and making sure that the entire signal is between 160 and 190 kHz. If you don't have a frequency meter, you can use an ordinary broadcast band radio. Select an operating frequency—say 185 kHz, which will have harmonics at 370, 555, 740, 925 kHz, etc. Choose a local station whose known frequency or its harmonic is the same as the

harmonic of your transmitter and adjust *L1* until the two beat against each other. To get enough signal injection, you may have to run the transmitter antenna lead close to the BCB radio antenna. Once the operating frequency has been located, the adjustment screw of *L1* can be secured with a drop of rubber cement or a jam nut.

You can use a field strength meter to adjust *C10* and *C11* for maximum output, or you can connect a milliameter between *T2* and *L2* (for the moment, ignore *R14* and *C12* and tune *C10-C11* for a dip in plate current as the tuned circuit passes through resonance. With the antenna disconnected, this dip should be about 2 mA; and with an antenna connected, the current will be about 8 to 9 mA with *C10-C11* adjusted for minimum current.

To keep the operation legal, the power input to the final must be one watt or less. Measure the voltage at pin 5 of *L2*. If it is 120 volts, then you can run 8.3 mA final current (120 x 0.0083 = 1 watt). If the voltage is higher than 120, install *R14* bypassed by *C12* to reduce the voltage to 120. Resistor *R14* is determined (experimentally) by how much you have to lower the voltage.

Antenna. When you have only one watt of output power, the antenna becomes of paramount importance. A length of wire tossed out the window will not work. For best results, a vertical antenna should be used, with the total length of both transmission line and antenna not more than 50 feet. A good ground, preferably a series of long buried radials, must be used.

There are many all-wave receivers capable of tuning to the 160-to190-kHz band. If you have one of these, you can use it in conjunction with the transmitter to form a complete station. If you don't have one, you will be interested in the receiver which will be described here next month—a fixed-tuned superhet tuner designed specifically to be used with this transmitter. ◈

View of bottom of chassis shows how connections are made point-to-point with a liberal use of multi-lug terminal strips to support components.

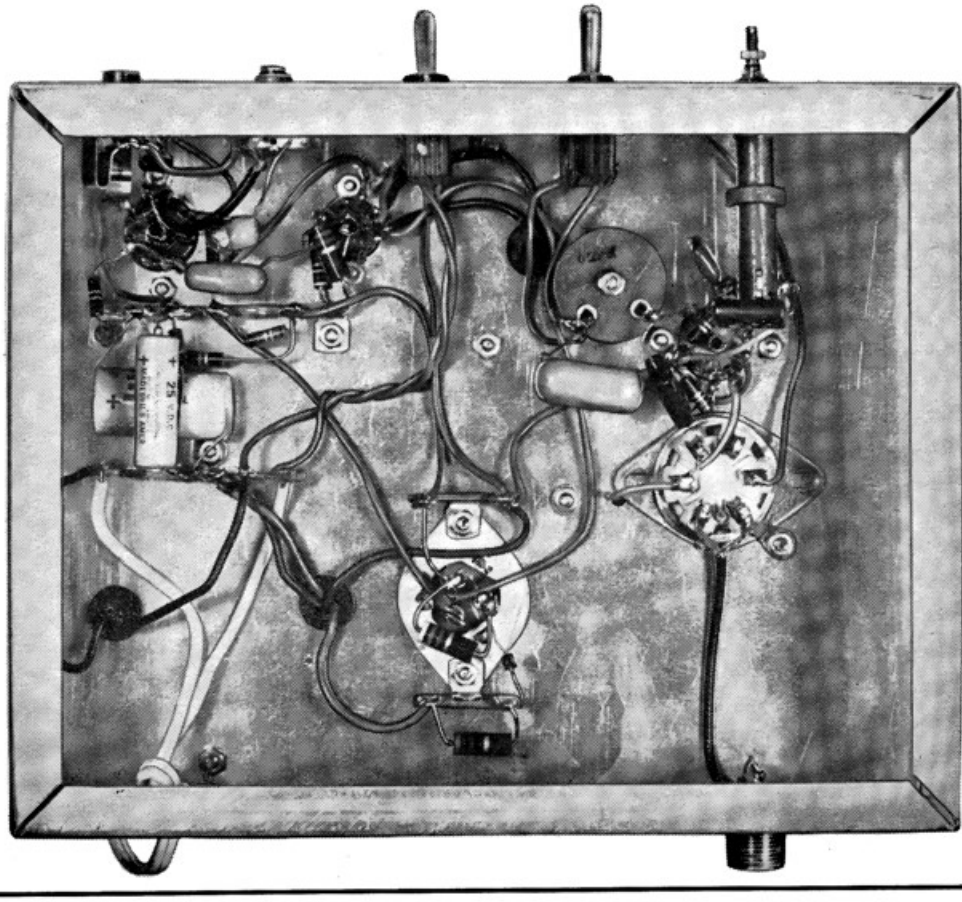

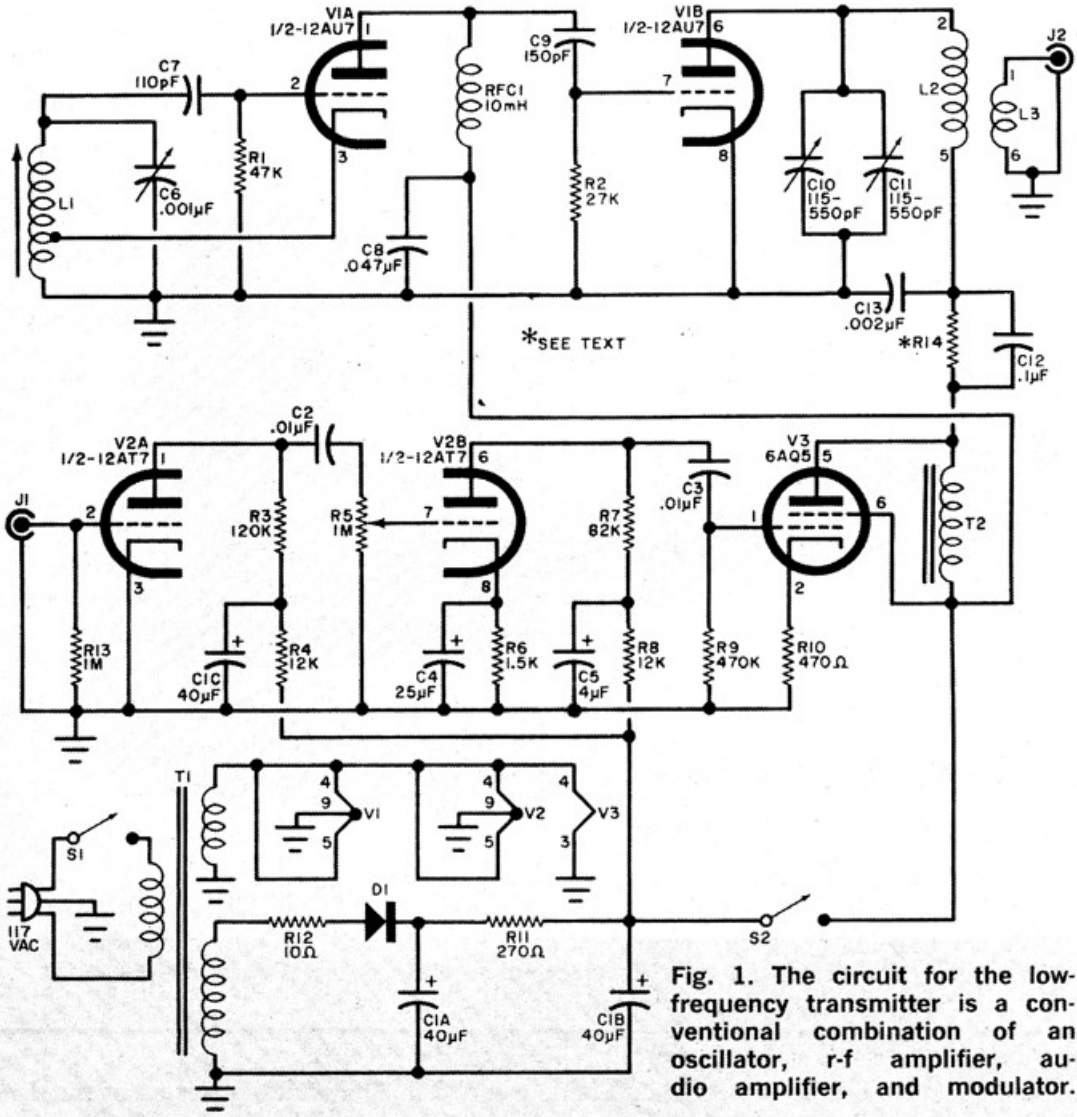

Fig. 1. The circuit for the low-frequency transmitter is a conventional combination of an oscillator, r-f amplifier, audio amplifier, and modulator.

PARTS LIST

C1—Three-section, 40-µF, 150-volt electrolytic capacitor
C2,C3—0.01-µF, 400-volt capacitor
C4—25-µF, 25-volt electrolytic capacitor
C5—4-µF, 150-volt electrolytic capacitor
C6—0.001-µF, 500-volt silver mica capacitor
C7—110-pF, 500-volt mica capacitor
C8—0.047-µF, 400-volt capacitor
C9—150-pF, 500-volt mica capacitor
C10,C11—115-550-pF trimmer capacitor
C12—0.1-µF, 400-volt capacitor
C13—0.002-µF, 500-volt disc capacitor
D1—Silicon rectifier
J1—Microphone jack
J2—Coaxial connector (Amphenol 83-1R or similar)
L1—Miller X-5496-C longwave tapped coil
L2—200 turns, #30 enamelled wire scramble wound on 1¼" diameter coil form
L3—25 turns, #30 wire, scramble wound on top of L2
R1—47,000-ohm, ½-watt resistor
R2—27,000-ohm, " "
R3—120,000-ohm, " "
R4,R8—1200-ohm, " "
R5—1-megohm potentiometer
R6—1500-ohm, ½-watt resistor
R7—82,000-ohm, " "
R9—470,000-ohm, " "
R10—470-ohm, 1-watt "
R11—270-ohm, " "
R12—10-ohm, " "
R13—1-megohm, ½-watt "
R14—See text
S1,S2—Spst slide or toggle switch
T1—Transformer; secondary, 125V at 50mA and 6.3V at 2A
T2—8-henry, 40mA choke
V1—12AU7
V2—12AT7
V3—6AQ5
Misc.—7" x 9" x 2" aluminum chassis (Bud AC-406 or similar), 7-prong tube socket, 6-prong tube socket, 9-pin tube socket (2), polystyrene coil form 2¼" long x 1¼" diam (Mayfair 24-6P or similar), terminal strips, rubber grommets, mounting hardware, short length of 52-ohm coaxial cable, antenna system (50 ft max for transmission line and antenna combined).

Tuner for the Neglected Band

BUILD THIS COMPANION TUNER FOR THE LICENSE-FREE TRANSMITTER DESCRIBED LAST MONTH

BY JIM WHITE/W5LET

LAST MONTH, we described a one-watt transmitter for the 160-190-kHz band. This month, as promised, we will discuss a companion long-wave tuner.

The circuit, shown in Fig. 1, uses four conventional vacuum tubes and requires only an audio amplifier and antenna to make it a top-notch receiver. Headphones can be connected directly to the audio output if desired. Both *V1* and *V2* are r-f amplifiers and are adjusted to the same frequency as the transmitter you will be receiving.

The very low power of the transmitter makes it necessary to have a sensitive tuner, so two r-f stages are used. Also, two r-f stages provide a better rejection of strong BCB signals that can creep into a low-frequency converter. The use of two fixed tuned stages also eliminates the problem of tracking, with its increase in cost.

Following the two r-f stages is *V3*, a converter stage, where the input frequency is changed to 455 kHz. This is then amplified by *V4*. Diode *D1* is both the a-m detector and agc device. The power supply is a conventional half-wave type.

The two r-f transformers, *T2* and *T3*, are conventional 262-kHz types with trimmer capacitors to bring their frequency down to the 160-190-kHz range. The antenna coil, *T1*, is a TV horizontal width coil with 30 turns of #28 enameled wire added as the coupling coil.

The tuner has three controls: *R15* for audio gain, *R18* for r-f gain, and *S2*, the standby switch. The ac control switch, *S1*, is mounted on *R15*.

Construction. The prototype of the tuner was built on a 7″ X 9″ X 2″ aluminum chassis (the same as the transmitter) and the general layout is shown in Fig. 2. The large holes for tubes, transformers, etc. were made with chassis punches, while all the smaller holes were drilled. Mount the components so that interconnecting leads are as short as possible. A number of terminal strips were used below the chassis to support most of the components. The trimmer capacitors for *T2* and *T3* were soldered directly to the appropriate terminals on the transformers.

The 30 turns of #28 wire on *T1* are wound directly on top of the coil and in the same direction as the turns on the coil. When wiring *T6*, the oscillator coil, be sure to follow the manufacturer's recommended connections or the converter will not oscillate.

Adjustments. With the power turned on, make sure that all four filaments heat up, and carefully check for the presence of

This bottom view of the tuner shows how point-to-point wiring was used. The adjustment for T6, the oscillator coil, is near top right corner.

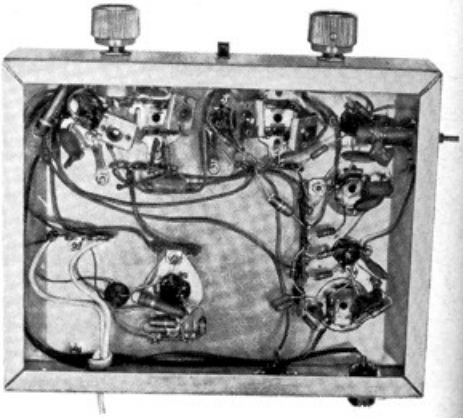

plate and screen voltage on the tubes. Connect an audio cable from *J2* to an audio amplifier. The first adjustment is that of *T6*, the oscillator coil. This can be made by using a conventional BCB radio in close proximity to the receiver. Assume you want to tune to 175-kHz. Add this to the i-f frequency (455 kHz) and the result is 630 kHz. Tune the BCB radio to 630 kHz and slowly adjust the slug of *T6* until you hear the signal from the oscillator. Lock the *T6* slug with a jam nut or a drop of cement on the threads.

The other adjustments can be made in one of two ways: if you have a well-calibrated oscillator that tunes to 160-190 kHz, things will be simplified; or if you have built the companion transmitter, you can use it. In either case, connect a VTVM across *C6* (in the agc line) with the negative lead to the line. Now with the appropriate long-wave signal injected into the antenna circuit, you should get some indication on the meter. Adjust *C7*, *C8*, *C9*, and *C10* for a maximum indication. Then adjust the slugs of *T1*, *T4*, and *T5* to further increase the meter indication. You may have to decrease the signal generator output or move the transmitter farther away to keep from overloading the receiver.

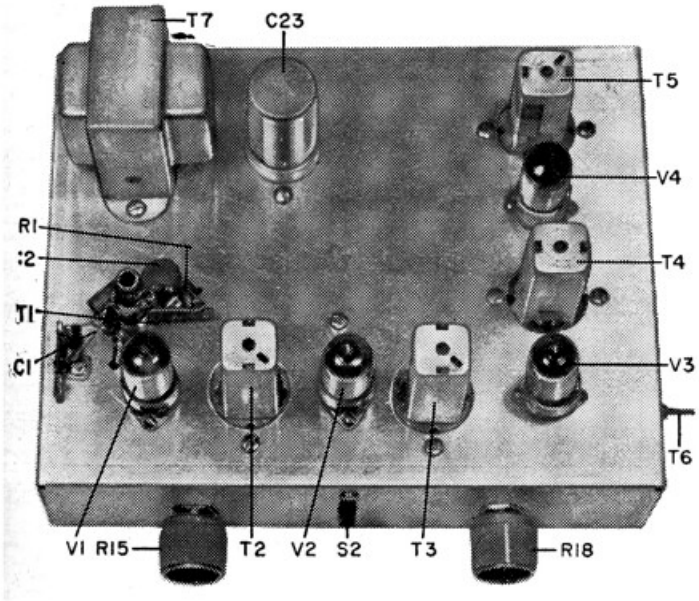

Fig. 2. This view of the top of the tuner shows how components were arranged on chassis for the prototype.

Operation. With the low-frequency tuner properly aligned and with a long antenna connected to it, adjust the audio gain (*R15*) for a comfortable level and operate the r-f gain control (*R18*) so that the received signal does not overload the receiver. To use the transmitter and tuner together, you can interlock the standby switches. ◈

PARTS LIST

C1—470-pF, 500-volt mica capacitor
C2-C5,C11,C12,C16-C19—0.01-μF, 500-volt, disc ceramic capacitor
C6—0.02-μF, 400-volt capacitor
C7-C10—25-280-pF compression trimmer capacitor
C13—150-pF, 500-volt silver mica capacitor
C14—500-pF, 500-volt silver mica capacitor
C15—0.02-μF, 500-volt disc ceramic capacitor
C20,C21—150-pF, 500-volt disc ceramic capacitor
C22—0.01-μF, 400-volt capacitor
C23—Dual 30-μF and 70-μF, 150-volt electrolytic capacitor
C24—0.2-μF, 200-volt capacitor
D1—Signal diode (1N34A or similar)
D2—600V, 750mA rectifier diode
J1—Coaxial connector
J2—Phono connector
R1,R4,R10—100,000-ohm, ½-watt resistor
R2,R5,R11—68-ohm, ½-watt resistor
R3,R6,R9,R12—1000-ohm, ½-watt resistor
R7—27,000-ohm, ½-watt resistor
R8—10,000-ohm, ½-watt resistor
R13,R14—1-megohm, ½-watt resistor
R15—1-megohm, audio taper potentiometer with switch S1
R16—470-ohm, 2-watt resistor
R17—10-ohm, 1-watt resistor
R18—10,000-ohm, 2-watt linear taper potentiometer
R19—100,000-ohm, 1-watt resistor
S1—Spst switch on R15
S2—Spst slide or toggle switch
T1—TV width coil, 0.5-5 mH (Miller 6313 or similar)
T2,T3—262-kHz miniature i-f transformer (Miller 12H1 or similar)
T4,T5—455-kHz miniature i-f transformer (Miller 12C1 or similar)
T6—Oscillator coil Meissner 14-1028 broadcast type
T7—Transformer; secondaries: 125V at 50mA and 6.3V at 2A
V1,V2,V4—6BJ6 tube
V3—6BE6 tube
Misc.—Chassis (Bud AC406 or similar), 7-pin miniature tube socket (4), knobs, terminal strips, ground lugs, rubber grommets, line cord, mounting hardware, short length of #28 enamelled wire for T1, short length of thin coaxial cable for antenna connector.

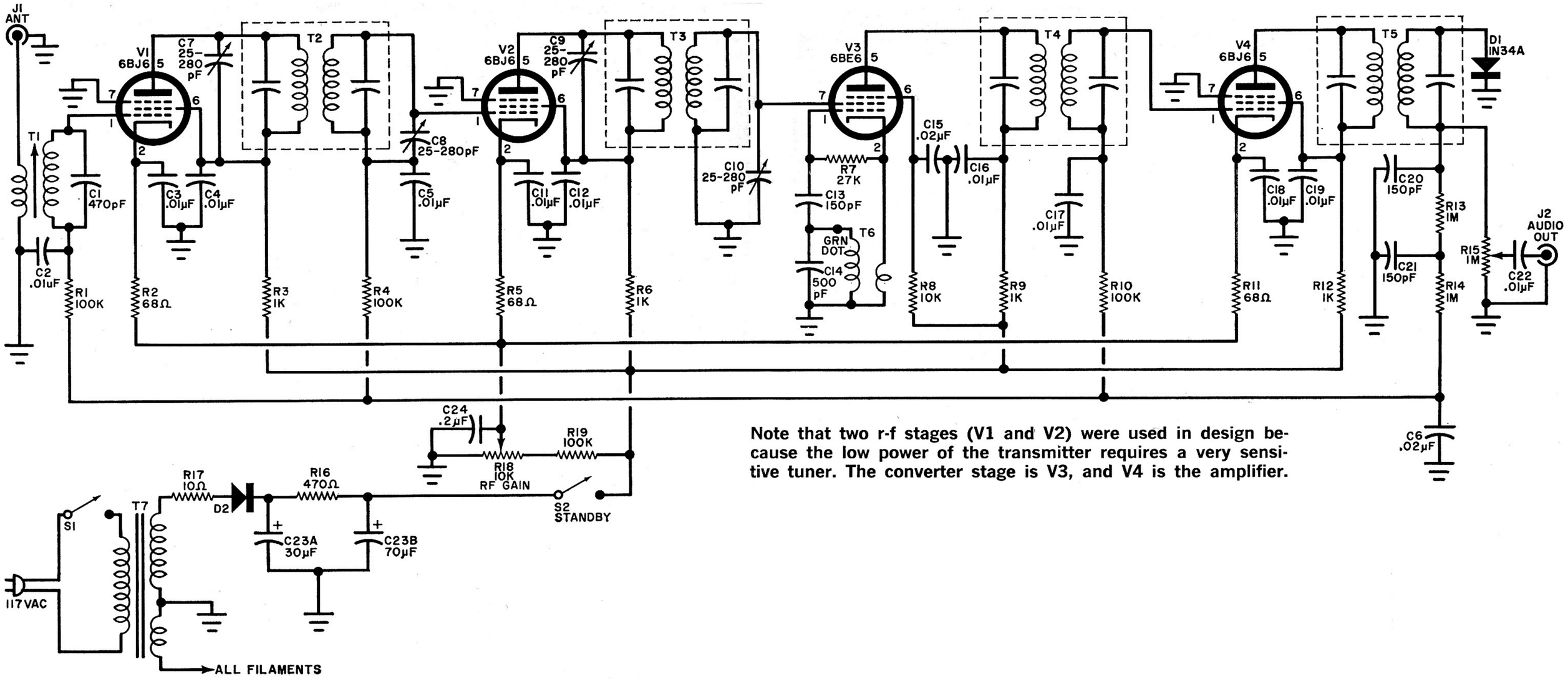

Note that two r-f stages (V1 and V2) were used in design because the low power of the transmitter requires a very sensitive tuner. The converter stage is V3, and V4 is the amplifier.